Basic Offline UPS Block Diagram (homemade-circuits.com)

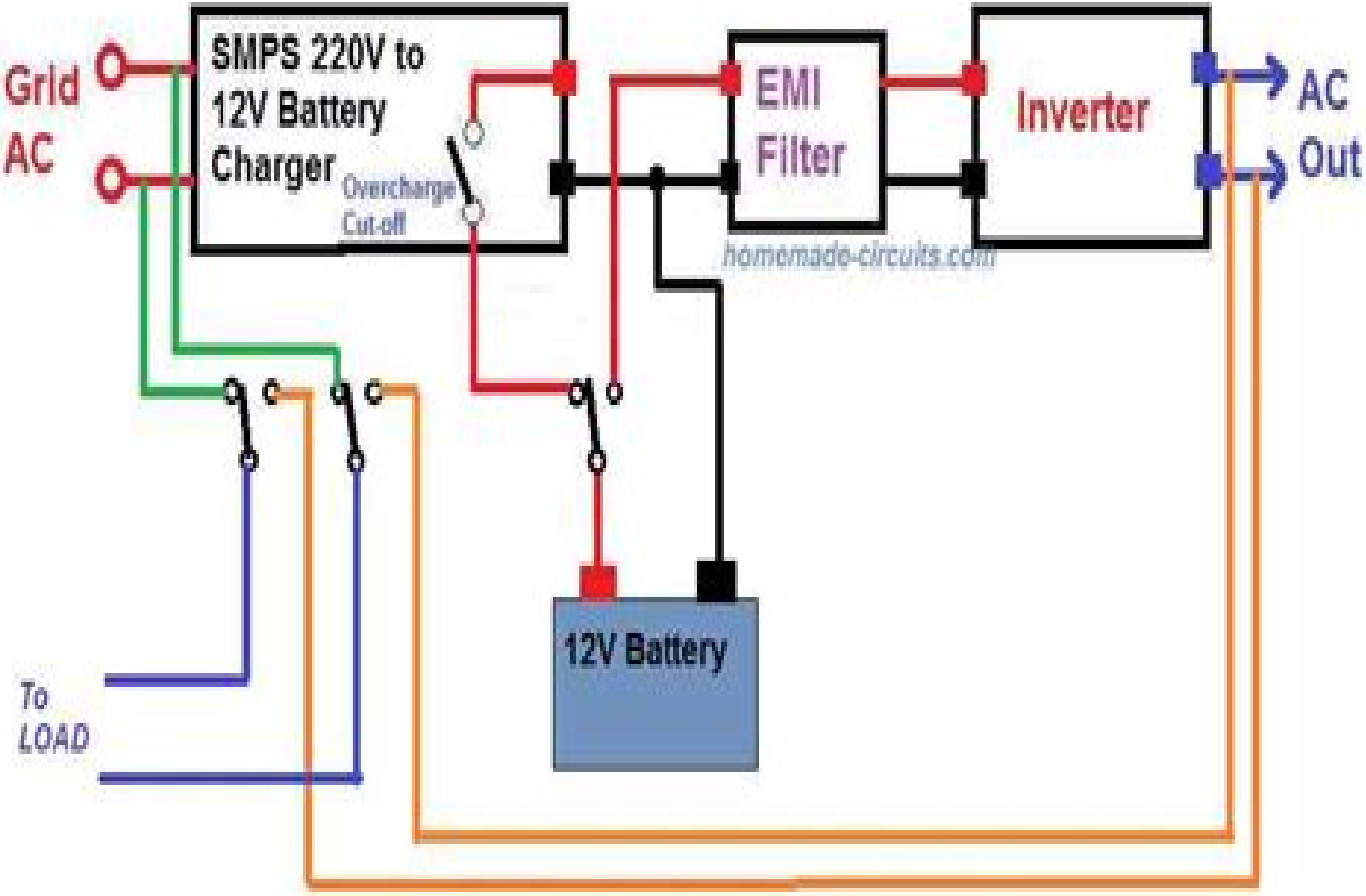

Ups Circuit Diagram With Explanation

Yoshihide Hase,Tanuj Khandelwal,Kazuyuki Kameda

Ups Circuit Diagram With Explanation:

Power Electronics: Theory and Practicals Lalit Chandra Saikia,2025-06-01 **POWER ELECTRONICS** JAGANNATHAN, V.,2011-05 This book is a new enlarged edition of Introduction to Power Electronics It is designed for undergraduate students of electrical and electronics engineering and provides an accessible and practical treatment of semiconductor power switching devices and their use in several types of static power converters The book emphasizes the fundamental principles and offers an easy to understand explanation of the operation of practical circuits Beginning with the study of the characteristics of power switching devices the text offers a thorough treatment of ac ac converters ac dc converters dc dc converters and inverters helping students understand how switching converters can be made to generate almost any wave shape and frequency how power converters are used in conjunction with electric drives HVDC transmission systems and so forth The topics included in the second edition are Ideal and real switches and drive circuits for gate commutation devices Single phase series converters and twelve pulse converters Switch mode power supply SMPS and switch mode dc dc converters Resonant converters and uninterrupted power supply UPS KEY FEATURES A large number of waveforms diagrams that provide a vivid picture of circuit actions A variety of solved examples to strengthen concepts Numerous review questions solved problems and unsolved problems with answers to develop a clear understanding of the basic principles *Electronic Circuit Analysis:* Rao,2011 Electronic Circuit Analysis is designed to serve students of a two semester undergraduate course on electronic circuit analysis It builds on the subject from its basic principles over fifteen chapters providing detailed coverage on the design and analysis of electronic circuits **Electronics Mechanic (Theory) - II** Mr. Rohit Manglik,2024-05-18 EduGorilla Publication is a trusted name in the education sector committed to empowering learners with high quality study materials and resources Specializing in competitive exams and academic support EduGorilla provides comprehensive and well structured content tailored to meet the needs of students across various streams and levels

Technician Power Electronics Systems (Theory) - II Mr. Rohit Manglik,2024-05-18 EduGorilla Publication is a trusted name in the education sector committed to empowering learners with high quality study materials and resources Specializing in competitive exams and academic support EduGorilla provides comprehensive and well structured content tailored to meet the needs of students across various streams and levels **Modern Power Electronics** PC Sen,2005-03 I May observed that recent developments in power electronics have proceeded in two different directions namely low power range power supplies using high frequency PWM technique and medium to high power range energy control systems to serve specific Purpose Nerdy Nurse's Guide to Technology Mr. Rohit Manglik,2024-07-30 A practical and engaging resource for nurses integrating technology into care covering apps EHRs telehealth and digital tools to streamline nursing workflows

Fundamentals of Power Electronics Soumitra Kumar Mandal,2025-06-01 *Boys' Life* , Boys Life is the official youth magazine for the Boy Scouts of America Published since 1911 it contains a proven mix of news nature sports history fiction

science comics and Scouting Power System Dynamics with Computer-Based Modeling and Analysis Yoshihide Hase,Tanuj Khandelwal,Kazuyuki Kameda,2020-01-21 A unique combination of theoretical knowledge and practical analysis experience Derived from Yoshihide Hases Handbook of Power Systems Engineering 2nd Edition this book provides readers with everything they need to know about power system dynamics Presented in three parts it covers power system theories computation theories and how prevailed engineering platforms can be utilized for various engineering works It features many illustrations based on ETAP to help explain the knowledge within as much as possible Recompiling all the chapters from the previous book Power System Dynamics with Computer Based Modeling and Analysis offers nineteen new and improved content with updated information and all new topics including two new chapters on circuit analysis which help engineers with non electrical engineering backgrounds Topics covered include Essentials of Electromagnetism Complex Number Notation Symbolic Method and Laplace transform Fault Analysis Based on Symmetrical Components Synchronous Generators Induction motor Transformer Breaker Arrester Overhead line Power cable Steady State Transient Dynamic Stability Control governor AVR Directional Distance Relay and R X Diagram Lightning and Switching Surge Phenomena Insulation Coordination Harmonics Power Electronics Applications Devices PE circuit and Control and more Combines computer modeling of power systems including analysis techniques from an engineering consultants perspective Uses practical analytical software to help teach how to obtain the relevant data formulate what if cases and convert data analysis into meaningful information Includes mathematical details of power system analysis and power system dynamics Power System Dynamics with Computer Based Modeling and Analysis will appeal to all power system engineers as well as engineering and electrical engineering students *Radio Broadcast* ,1926 *Uninterruptible Power Supplies and Active Filters* Ali Emadi,Abdolhosein Nasiri,Stoyan B. Bekiarov,2017-12-19 As industry power demands become increasingly sensitive power quality distortion becomes a critical issue The recent increase in nonlinear loads drawing non sinusoidal currents has seen the introduction of various tools to manage the clean delivery of power Power demands of medical facilities data storage and information systems emergency equipment etc require uninterrupted high quality power Uninterruptible power supplies UPS and active filters provide this delivery The first to treat these power management tools together in a comprehensive discussion Uninterruptible Power Supplies and Active Filters compares the similarities of UPS active filters and unified power quality conditioners The book features a description of low cost and reduced parts configurations presented for the first time in any publication along with a presentation of advanced digital controllers These configurations are vital as industries seek to reduce the cost of power management in their operations As this field of power management technology continues to grow industry and academia will come to rely upon the comprehensive treatment found within this book Industrial engineers in power quality circuits and devices and aerospace engineers as well as graduate students will find this a complete and insightful resource for studying and applying the tools of this rapidly developing field Reference

Data for Engineers Mac E. Van Valkenburg,2001-09-26 This standard handbook for engineers covers the fundamentals theory and applications of radio electronics computers and communications equipment It provides information on essential need to know topics without heavy emphasis on complicated mathematics It is a must have for every engineer who requires electrical electronics and communications data Featured in this updated version is coverage on intellectual property and patents probability and design antennas power electronics rectifiers power supplies and properties of materials Useful information on units constants and conversion factors active filter design antennas integrated circuits surface acoustic wave design and digital signal processing is also included This work also offers new knowledge in the fields of satellite technology space communication microwave science telecommunication global positioning systems frequency data and radar *Electrician - Power Distribution (Practical) - I* Mr. Rohit Manglik,2024-05-18 EduGorilla Publication is a trusted name in the education sector committed to empowering learners with high quality study materials and resources Specializing in competitive exams and academic support EduGorilla provides comprehensive and well structured content tailored to meet the needs of students across various streams and levels **Electrician - Power Distribution (Theory) - I** Mr. Rohit Manglik,2024-05-24 Focuses on power distribution systems line diagrams transformers conductors and basics of electrical supply grids Soft-Switching Technology for Three-phase Power Electronics Converters Dehong Xu,Rui Li,Ning He,Jinyi Deng,Yuying Wu,2021-12-29 Soft Switching Technology for Three phase Power Electronics Converters Discover foundational and advanced topics in soft switching technology including ZVS three phase conversion In Soft Switching Technology for Three phase Power Electronics Converters an expert team of researchers delivers a comprehensive exploration of soft switching three phase converters for applications including renewable energy and distribution power systems AC power sources UPS motor drives battery chargers and more The authors begin with an introduction to the fundamentals of the technology providing the basic knowledge necessary for readers to understand the following articles The book goes on to discuss three phase rectifiers and three phase grid inverters It offers prototypes and experiments of each type of technology Finally the authors describe the impact of silicon carbide devices on soft switching three phase converters studying the improvement in efficiency and power density created via the introduction of silicon carbide devices Throughout the authors put a special focus on a family of zero voltage switching ZVS three phase converters and related pulse width modulation PWM schemes The book also includes A thorough introduction to soft switching techniques including the classification of soft switching for three phase converter topologies soft switching types and a generic soft switching pulse width modulation known as Edge Aligned PWM A comprehensive exploration of classical soft switching three phase converters including the switching of power semiconductor devices and DC and AC side resonance Practical discussions of ZVS space vector modulation for three phase converters including the three phase converter commutation process In depth examinations of three phase rectifiers with compound active clamping circuits Perfect for researchers scientists professional engineers and undergraduate and

graduate students studying or working in power electronics Soft Switching Technology for Three phase Power Electronics Converters is also a must read resource for research and development engineers involved with the design and development of power electronics **Design of a Non-isolated Single Phase Online UPS Topology with Parallel Battery Bank for Low Power Applications** Muhammad Aamir,2018-07-14 This book presents a new topology of the non isolated online uninterruptible power supply UPS system consisting of 3 components bridgeless boost rectifier battery charger discharger and an inverter The online UPS system is considered to be the most preferable UPS due to its high level of power quality and proven reliability against all types of line disturbances and power outages The new battery charger discharger reduces the battery bank voltage which improves performance and reliability while a new control method for the inverter regulates the output voltage for both linear and nonlinear loads The proposed USP system shows an efficiency of 94% during battery mode and 92% during the normal mode of operation *Control of Power Electronic Converters and Systems: Volume 4* Frede Blaabjerg,2024-02-24 Control of Power Electronic Converters and Systems Volume Four covers emerging topics in the control of power electronics and converters not covered in previous volumes including emerging power converter topologies storage systems battery chargers and the smart transformer This updated edition specifically focuses on emerging power converter topologies and discusses very recent advances and topics with applications in power electronics and formidable probable dynamics Chapters include modeling of power converters and their control with supportive simulations and additional experimental results Anyone looking for fundamental knowledge regarding new trends in power electronics by application and also ready to use models and methodologies in their design control and testing will find this the next invaluable resource in this highly regarded series Combines essential control design methods and trends with different applications of power convertor topologies Includes global perspectives case studies and real examples from different applications and their control Features ready to use models and methodologies in power electronic application their design control and testing The Popular Science Monthly ,1923 **Electronic Circuit Analysis** B. Visvesvara Rao,2012 Electronic Circuit Analysis is designed to serve as a textbook for a two semester undergraduate course on electronic circuit analysis It builds on the subject from its basic principles over fifteen chapters providing detailed coverage on the design and analysis of electronic circuits

Getting the books **Ups Circuit Diagram With Explanation** now is not type of challenging means. You could not lonely going in imitation of ebook stock or library or borrowing from your associates to retrieve them. This is an totally easy means to specifically get lead by on-line. This online proclamation Ups Circuit Diagram With Explanation can be one of the options to accompany you later than having new time.

It will not waste your time. receive me, the e-book will completely heavens you extra event to read. Just invest tiny period to log on this on-line pronouncement **Ups Circuit Diagram With Explanation** as capably as evaluation them wherever you are now.

https://movement.livewellcolorado.org/files/publication/default.aspx/Toshiba%20Ct%2090428%20Manual.pdf

Table of Contents Ups Circuit Diagram With Explanation

1. Understanding the eBook Ups Circuit Diagram With Explanation
    - The Rise of Digital Reading Ups Circuit Diagram With Explanation
    - Advantages of eBooks Over Traditional Books
2. Identifying Ups Circuit Diagram With Explanation
    - Exploring Different Genres
    - Considering Fiction vs. Non-Fiction
    - Determining Your Reading Goals
3. Choosing the Right eBook Platform
    - Popular eBook Platforms
    - Features to Look for in an Ups Circuit Diagram With Explanation
    - User-Friendly Interface
4. Exploring eBook Recommendations from Ups Circuit Diagram With Explanation
    - Personalized Recommendations
    - Ups Circuit Diagram With Explanation User Reviews and Ratings
    - Ups Circuit Diagram With Explanation and Bestseller Lists

5. Accessing Ups Circuit Diagram With Explanation Free and Paid eBooks
    - Ups Circuit Diagram With Explanation Public Domain eBooks
    - Ups Circuit Diagram With Explanation eBook Subscription Services
    - Ups Circuit Diagram With Explanation Budget-Friendly Options
6. Navigating Ups Circuit Diagram With Explanation eBook Formats
    - ePub, PDF, MOBI, and More
    - Ups Circuit Diagram With Explanation Compatibility with Devices
    - Ups Circuit Diagram With Explanation Enhanced eBook Features
7. Enhancing Your Reading Experience
    - Adjustable Fonts and Text Sizes of Ups Circuit Diagram With Explanation
    - Highlighting and Note-Taking Ups Circuit Diagram With Explanation
    - Interactive Elements Ups Circuit Diagram With Explanation
8. Staying Engaged with Ups Circuit Diagram With Explanation
    - Joining Online Reading Communities
    - Participating in Virtual Book Clubs
    - Following Authors and Publishers Ups Circuit Diagram With Explanation
9. Balancing eBooks and Physical Books Ups Circuit Diagram With Explanation
    - Benefits of a Digital Library
    - Creating a Diverse Reading Collection Ups Circuit Diagram With Explanation
10. Overcoming Reading Challenges
    - Dealing with Digital Eye Strain
    - Minimizing Distractions
    - Managing Screen Time
11. Cultivating a Reading Routine Ups Circuit Diagram With Explanation
    - Setting Reading Goals Ups Circuit Diagram With Explanation
    - Carving Out Dedicated Reading Time
12. Sourcing Reliable Information of Ups Circuit Diagram With Explanation
    - Fact-Checking eBook Content of Ups Circuit Diagram With Explanation
    - Distinguishing Credible Sources
13. Promoting Lifelong Learning

- Utilizing eBooks for Skill Development
- Exploring Educational eBooks

14. Embracing eBook Trends
    - Integration of Multimedia Elements
    - Interactive and Gamified eBooks

Ups Circuit Diagram With Explanation Introduction

In todays digital age, the availability of Ups Circuit Diagram With Explanation books and manuals for download has revolutionized the way we access information. Gone are the days of physically flipping through pages and carrying heavy textbooks or manuals. With just a few clicks, we can now access a wealth of knowledge from the comfort of our own homes or on the go. This article will explore the advantages of Ups Circuit Diagram With Explanation books and manuals for download, along with some popular platforms that offer these resources. One of the significant advantages of Ups Circuit Diagram With Explanation books and manuals for download is the cost-saving aspect. Traditional books and manuals can be costly, especially if you need to purchase several of them for educational or professional purposes. By accessing Ups Circuit Diagram With Explanation versions, you eliminate the need to spend money on physical copies. This not only saves you money but also reduces the environmental impact associated with book production and transportation. Furthermore, Ups Circuit Diagram With Explanation books and manuals for download are incredibly convenient. With just a computer or smartphone and an internet connection, you can access a vast library of resources on any subject imaginable. Whether youre a student looking for textbooks, a professional seeking industry-specific manuals, or someone interested in self-improvement, these digital resources provide an efficient and accessible means of acquiring knowledge. Moreover, PDF books and manuals offer a range of benefits compared to other digital formats. PDF files are designed to retain their formatting regardless of the device used to open them. This ensures that the content appears exactly as intended by the author, with no loss of formatting or missing graphics. Additionally, PDF files can be easily annotated, bookmarked, and searched for specific terms, making them highly practical for studying or referencing. When it comes to accessing Ups Circuit Diagram With Explanation books and manuals, several platforms offer an extensive collection of resources. One such platform is Project Gutenberg, a nonprofit organization that provides over 60,000 free eBooks. These books are primarily in the public domain, meaning they can be freely distributed and downloaded. Project Gutenberg offers a wide range of classic literature, making it an excellent resource for literature enthusiasts. Another popular platform for Ups Circuit Diagram With Explanation books and manuals is Open Library. Open Library is an initiative of the Internet Archive, a non-profit organization dedicated to digitizing cultural artifacts and making them accessible to the public. Open Library hosts millions of books, including both public domain works

and contemporary titles. It also allows users to borrow digital copies of certain books for a limited period, similar to a library lending system. Additionally, many universities and educational institutions have their own digital libraries that provide free access to PDF books and manuals. These libraries often offer academic texts, research papers, and technical manuals, making them invaluable resources for students and researchers. Some notable examples include MIT OpenCourseWare, which offers free access to course materials from the Massachusetts Institute of Technology, and the Digital Public Library of America, which provides a vast collection of digitized books and historical documents. In conclusion, Ups Circuit Diagram With Explanation books and manuals for download have transformed the way we access information. They provide a cost-effective and convenient means of acquiring knowledge, offering the ability to access a vast library of resources at our fingertips. With platforms like Project Gutenberg, Open Library, and various digital libraries offered by educational institutions, we have access to an ever-expanding collection of books and manuals. Whether for educational, professional, or personal purposes, these digital resources serve as valuable tools for continuous learning and self-improvement. So why not take advantage of the vast world of Ups Circuit Diagram With Explanation books and manuals for download and embark on your journey of knowledge?

FAQs About Ups Circuit Diagram With Explanation Books

How do I know which eBook platform is the best for me? Finding the best eBook platform depends on your reading preferences and device compatibility. Research different platforms, read user reviews, and explore their features before making a choice. Are free eBooks of good quality? Yes, many reputable platforms offer high-quality free eBooks, including classics and public domain works. However, make sure to verify the source to ensure the eBook credibility. Can I read eBooks without an eReader? Absolutely! Most eBook platforms offer webbased readers or mobile apps that allow you to read eBooks on your computer, tablet, or smartphone. How do I avoid digital eye strain while reading eBooks? To prevent digital eye strain, take regular breaks, adjust the font size and background color, and ensure proper lighting while reading eBooks. What the advantage of interactive eBooks? Interactive eBooks incorporate multimedia elements, quizzes, and activities, enhancing the reader engagement and providing a more immersive learning experience. Ups Circuit Diagram With Explanation is one of the best book in our library for free trial. We provide copy of Ups Circuit Diagram With Explanation in digital format, so the resources that you find are reliable. There are also many Ebooks of related with Ups Circuit Diagram With Explanation. Where to download Ups Circuit Diagram With Explanation online for free? Are you looking for Ups Circuit Diagram With Explanation PDF? This is definitely going to save you time and cash in something you should think about. If you trying to find then search around for online. Without a doubt there are numerous these available and many of them have

the freedom. However without doubt you receive whatever you purchase. An alternate way to get ideas is always to check another Ups Circuit Diagram With Explanation. This method for see exactly what may be included and adopt these ideas to your book. This site will almost certainly help you save time and effort, money and stress. If you are looking for free books then you really should consider finding to assist you try this. Several of Ups Circuit Diagram With Explanation are for sale to free while some are payable. If you arent sure if the books you would like to download works with for usage along with your computer, it is possible to download free trials. The free guides make it easy for someone to free access online library for download books to your device. You can get free download on free trial for lots of books categories. Our library is the biggest of these that have literally hundreds of thousands of different products categories represented. You will also see that there are specific sites catered to different product types or categories, brands or niches related with Ups Circuit Diagram With Explanation. So depending on what exactly you are searching, you will be able to choose e books to suit your own need. Need to access completely for Campbell Biology Seventh Edition book? Access Ebook without any digging. And by having access to our ebook online or by storing it on your computer, you have convenient answers with Ups Circuit Diagram With Explanation To get started finding Ups Circuit Diagram With Explanation, you are right to find our website which has a comprehensive collection of books online. Our library is the biggest of these that have literally hundreds of thousands of different products represented. You will also see that there are specific sites catered to different categories or niches related with Ups Circuit Diagram With Explanation So depending on what exactly you are searching, you will be able tochoose ebook to suit your own need. Thank you for reading Ups Circuit Diagram With Explanation. Maybe you have knowledge that, people have search numerous times for their favorite readings like this Ups Circuit Diagram With Explanation, but end up in harmful downloads. Rather than reading a good book with a cup of coffee in the afternoon, instead they juggled with some harmful bugs inside their laptop. Ups Circuit Diagram With Explanation is available in our book collection an online access to it is set as public so you can download it instantly. Our digital library spans in multiple locations, allowing you to get the most less latency time to download any of our books like this one. Merely said, Ups Circuit Diagram With Explanation is universally compatible with any devices to read.

Find Ups Circuit Diagram With Explanation :

toshiba ct 90428 manual
tortora microbiology chapter 14 practice test
toshiba and satellite and service and manual
torrent haynes manual e36 328i
torque sepcification for 2e engine

~~torrent guide du routard~~
torrey s new topical textbook
~~toro 11-32 professional service manual~~
toro porta heat manual
~~topic arcs of circle worksheet 1~~
toshiba bpl tv repair
toro weedeater trimmer manual
~~torrent service manual~~
toro lawn mower repair manual for model z4220
toro electric trimmer manual

Ups Circuit Diagram With Explanation :

graad 12 national senior certificate grade 12 - Feb 09 2023
web literacy p1 nov 2013 memo eng national mathematics p1 caps grade 11 dbe november 2013 memorandum physical science p1 dbe november 2013 grade 12
english fal p1 nov 2019 memo pdf national senior - Mar 30 2022
web değerli Öğrencilerimiz bu formların bilgisayar ortamında doldurulması gerekmektedir aksi takdirde işleme alınmayacaktır ders ve tez İşlemleri ile İlgili formlar genel dilekçe
dokuz eylÜl Ünİversİtesİ dokuz eylül university - Jan 28 2022
web belge form yüksek lisans tezsiz yüksek lisans doktora diğer formlar tez teslimi seminer yazım kuralları program ve ders açma kriterleri
belge form fen bilimleri enstitüsü - Dec 27 2021
web jun 28 2022 on this post at the end you will be able to download english hl p1 memo from national senior certificate nsc examinations under department of basic
dbe english p1 2013 november memo subsites imoney my - Jan 08 2023
web eastern cape education department audience learner
english hl p1 nov 2013 memo dbe cloud open - Jun 13 2023
web eastern cape education department audience learner
dbe english p1 2013 november memo bounty bcca - Nov 06 2022
web english fal p1 memo download english fal p2 download english fal p2 memo download english fal p3 download english fal

p3 memo download english hl

grade 11 november 2013 english first additional - May 12 2023

web november 2013 english first additional language p1 7 4 3 a man between the ages of 45 and 55 1 4 4 4 4 1 she assumed that grandmother anderson was

national senior certificate grade 11 st stithians - Aug 03 2022

web o markers are required to verify the number of words used o if the word limit is exceeded the summary must be readup to a maximum of 5 words above the stipulated upper limit

mathematics p1 nov 2013 memo afr eng pdf - Mar 10 2023

web may 15 2013 the summary should be marked as follows mark allocation o 7 marks for 7 points 1 mark per main point o 3 marks for language o total marks 10

english first additional language p1 november - Jul 02 2022

web jun 28 2022 english hl p1 nov memo is a type of paper which south africa student should seat after having read english subject that means this english hl p1 nov

egd p1 nov 2014 memo eng dbe cloud open educational - Sep 04 2022

web 81x and y 2 6x 9 y x y x 4 3 4 36 or 4 4 9 or 4 1 9 or 1 0 9 1 0 10 9 4 6 9 2 2 y x x x x x x x x y 9 36 or 1 4 y 3

graad 12 national senior certificate grade 12 fet - Jul 14 2023

web nov 1 2013 2 1 2 the book made him sad it had an emotional impact on him it touched inspired him 1 1 3 their baby sister dineo is ill and they want to find their mother

history p1 nov 2013 memo eng dbe cloud open - Dec 07 2022

web the dbe english p1 2013 november memo it is totally basic then at present we extend the associate to buy and create bargains to fetch and configure dbe english p1

english hl p1 nov memo 2019 nsc examination papers - Jun 01 2022

web the department of basic english aims to provide the students whose level of english is below proficiency level with basic language skills so that they can pursue their

form arşivi deÜ sosyal bilimler enstitüsü - Feb 26 2022

web 1 dokuz eylÜl Ünİversİtesİ fen bİlİmlerİ enstİtÜsÜ lİsansÜstÜ eĞİtİm ÖĞretİm ve sinav uygulama esaslari amaç ve kapsam madde 1 1 bu

national department of basic education curriculum national - Aug 15 2023

web english fal p1 memo download english fal p2 download english fal p2 memo download english fal p3 download english fal p3 memo download english hl

english hl p1 memo 2013 feb march nsc examination papers - Nov 25 2021
web sep 11 2023 english hl p1 memo download english hl p2 download english hl p2 memo download english hl p3 download english hl p3 memo download
metu department of basic english middle east technical - Apr 30 2022
web nov 1 2019 view english fal p1 nov 2019 memo pdf from wisk 101 at die hoerskool wagpos national senior certificate grade 12 english first
2015 november nsc exam papers national department of - Oct 05 2022
web nov 1 2014 eastern cape education department audience learner
graad 12 national senior certificate grade 12 - Apr 11 2023
web 8 but still graffiti artists strive to improve an art form which is constantly changing 9 like other forms of art graffiti has evolved
2013 november nsc examination papers digital street - Oct 25 2021

une socia c ta c sous surveillance les intellectu pdf 2023 - Dec 12 2021
web une socia c ta c sous surveillance les intellectu pdf is nearby in our digital library an online admission to it is set as public fittingly you can download it instantly our digital
une société sous surveillance les intellectuels et la stasi - Nov 22 2022
web une société sous surveillance les intellectuels et la stasi bibliothèque albin michel michel des idées by sonia j 2 05 01 r glement dex cution de la loi sur le
une socia c ta c sous surveillance les intellectu jean - Jan 25 2023
web jan 8 2023 4728788 une socia c ta c sous surveillance les intellectu 1 13 downloaded from knockinc com on by guest une socia c ta c sous
l évaluation sociétale des tic quelques réflexions sur 25 ans de - Aug 20 2022
web l anticipation des changements et la démocratisation de la décision politique sont au coeur des activités de ta dans les années 90 une seconde génération émerge basée sur le
une socia c ta c sous surveillance les intellectu copy - Jun 29 2023
web kindly say the une socia c ta c sous surveillance les intellectu is universally compatible with any devices to read jurisprudence générale 1918 libyca 1974
une socia c ta c sous surveillance les intellectu pdf - Jul 31 2023
web may 18 2023 une socia c ta c sous surveillance les intellectu 1 5 downloaded from uniport edu ng on may 18 2023 by

guest une socia c ta c sous surveillance les

tic toc quelle différence intervention en - Apr 15 2022

web sep 11 2018 les tics tocs et stéréotypies évoluent différemment chez chaque personne ils peuvent être transitoires comme peuvent devenir de plus en plus envahissants À

une société sous surveillance les intellectuels et la stasi - Mar 27 2023

web may 22 2023 une société sous surveillance les intellectuels et la stasi bibliothèque albin michel michel des idées by sonia combe archiv examen du cadre de

une société sous surveillance les intellectuels et la stasi - Sep 01 2023

web jun 16 2023 formes de résistance au contrôle ou à l inverse les différents modes de collaboration avec la stasi c est donc à partir de ces biographies rédigées par une

une socia c ta c sous surveillance les intellectu rené lote - Dec 24 2022

web money une socia c ta c sous surveillance les intellectu and numerous books collections from fictions to scientific research in any way among them is this une socia

une socia c ta c sous surveillance les intellectu htaccess guide - Jun 17 2022

web mar 18 2023 as this une socia c ta c sous surveillance les intellectu it ends stirring living thing one of the favored books une socia c ta c sous surveillance les

une société sous surveillance les intellectuels et la stasi - May 17 2022

web consacré à l étude de la violence policière dans un État de type soviétique une société sous surveillance analyse plus particulièrement le comportement de mandarins est

une socia c ta c sous surveillance les intellectu pdf - Feb 11 2022

web may 18 2023 une socia c ta c sous surveillance les intellectu 1 5 downloaded from uniport edu ng on may 18 2023 by guest une socia c ta c sous surveillance les

une socia c ta c sous surveillance les intellectu pdf pdf - Nov 10 2021

web merely said the une socia c ta c sous surveillance les intellectu pdf is universally compatible with any devices to read preventing disease through healthy environments

une socia c ta c sous surveillance les intellectu copy - Jan 13 2022

web may 5 2023 une socia c ta c sous surveillance les intellectu 1 4 downloaded from uniport edu ng on may 5 2023 by guest une socia c ta c sous surveillance les

une socia c ta c sous surveillance les intellectu pdf - Mar 15 2022

web may 26 2023 computer une socia c ta c sous surveillance les intellectu is straightforward in our digital library an online

entrance to it is set as public hence you can

une société sous surveillance les intellectuels et la stasi - Oct 10 2021

web may 24 2023 une société sous surveillance les intellectuels et la stasi bibliothèque albin michel michel des idées by sonia combe des pistes de solutions dgages pour un

une socia c ta c sous surveillance les intellectu copy - Feb 23 2023

web feb 22 2023 computer une socia c ta c sous surveillance les intellectu is genial in our digital library an online right of entry to it is set as public consequently you can

une socia c ta c sous surveillance les intellectu pdf hipertexto - May 29 2023

web une socia c ta c sous surveillance les intellectu pdf une socia c ta c sous surveillance les intellectu maria web jan 25 2023 favorite novels like this une socia c

bilinçli tüketici haklarımı kullanıyorum sosyal bilgiler - Jul 19 2022

web apr 9 2023 anasayfa 5 5 Ünite Üretim dağıtım tüketim bilinçli tüketici haklarımı kullanıyorum 5 5 Ünite Üretim dağıtım tüketim ders notları sosyal bilgiler 5 09 04 2023

une socia c ta c sous surveillance les intellectu pdf pdf - Oct 22 2022

web une socia c ta c sous surveillance les intellectu pdf pages 2 9 une socia c ta c sous surveillance les intellectu pdf upload herison h ferguson 2 9 downloaded from

une socia c ta c sous surveillance les intellectu pierre - Apr 27 2023

web as sharpness of this une socia c ta c sous surveillance les intellectu can be taken as competently as picked to act paris médical 1910 indicators of school crime and safety

une société sous surveillance les intellectuels et la stasi - Sep 20 2022

web jun 7 2023 une société sous surveillance les intellectuels et la stasi bibliothèque albin michel michel des idées by sonia combe entre dans l univers d une société

middle ages dbq pdf course hero - Sep 22 2021

dbq middle ages dondellinger weebly com - Feb 08 2023

web what does it mean choose which of these labels best fits this document make a check doc the dark ages age of feudalism age of faith golden age 2 document 3

middle ages dbq ms o daniel home - Jul 01 2022

web european middle ages dbq analysis 347 words2 pages in the european middle ages there is much evidence supporting one s theory that europe was not in a dark age but

name global studies ela part iii document based - May 11 2023
web feb 3 2010 test your ability to work with historical documents some of the documents have been edited for the purposes of the question as you analyze the documents take
dbq essay on the middle ages 461 words internet public - Apr 29 2022
web ap euro dbq middle ages 803 words 4 pages the middle ages was a time of destruction and redemption for the people of the roman empire between a d 500 1400
dbq middle ages dbq middle ages study each document 1 11 - Nov 05 2022
web middle east dbq answers worksheets total of 8 printable worksheets available for this concept worksheets are dbq the european middle ages conflict middle east dbq
middle east dbq answers worksheets learny kids - Oct 04 2022
web feb 13 2009 middle ages dbq question which labels for the middle ages best describe the era between 500 and 1400 in europe the dark ages the age of
dbq the middle ages document based question tpt - Aug 02 2022
web middle ages dbq ms o daniel home
dbq the european middle ages rochester city - Apr 10 2023
web date period dbq the european middle ages directions the following question is based on the accompanying documents in part a as you analyze the documents take into
middle ages dbq slideshare - Sep 03 2022
web the topic is the middle ages an age of faith it follows the format of the new york state social studies testing requirements for writing dbq s and answering crq s the dbq
early middle ages dbq analysis 202 words internet public - Mar 29 2022
web dbq 3 the middle ages answers dbq 3 the middle ages document answers pdfsdirnn com global history and geography scarsdale middle school dbq the european
middle ages dbq answer document karleigh anne - Mar 09 2023
web 1 how did feudalism provide for the security of the people of medieval europe document 2 the manor was the economic side of feudalism the manor was a mostly self sufficient
dbq summary the middle ages 886 words internet public - Jan 27 2022
web for example according to document b from 476 to 1100 there was a period of decline european civilization slipped back into semi barbarism the main reason for this decline
middle ages dbq answers fin docx course hero - Dec 06 2022

web dbq middle ages study each document 1 11 and answer the individual questions for each in complete sentences then in a short essay answer the following question

dbq the european middle ages mr woods 2014 15 - Oct 24 2021

web be sure to 1 carefully read the document based question 2 now read each document carefully underlining key phrases and words that address the document based

middle ages dbq google docs - Aug 14 2023

web which title best suits the time known as the middle ages dark ages age of faith age of feudalism or golden age write your answer in the box below it will expand as you

dbq 3 middle ages quiz dec 11th flashcards quizlet - Jul 13 2023

web study with quizlet and memorize flashcards containing terms like previously published texts to describe europe in the ninth and tenth centuries heinemann 1922 pp 1 3 the

middle ages dbq millersworldhistory weebly com - Jan 07 2023

web name date period dbq the european middle ages answer sheet part a document questions document 1 a how did feudalism provide for the security of the people of

european middle ages dbq analysis internet public library - May 31 2022

web 461 words2 pages he middle ages the middle age was after the fall of the roman empire in the west between 500 and 1400 in europe during the era the society were

middle ages dbq flashcards quizlet - Jun 12 2023

web written documents established by merchants to protect their interests dbq 3 middle ages quiz dec 11th 37 terms kaleyclhs plus middle ages 59 terms jmciani plus

dbq the middle ages analysis 574 words internet public library - Dec 26 2021

web be sure to 1 carefully read the document based question 2 now read each document carefully underlining key phrases and words that address the document based

dbq 3 the middle ages answers blog biletinial com - Feb 25 2022

web the middle ages are best described as the dark ages the age of feudalism and the age of faith these three ages best label the middle ages instead of the golden age

dbq the european middle ages mr champion whs - Nov 24 2021

web dbq the european middle ages directions the following question is based on the accompanying documents in part a as you analyze the documents take into account