www.downloadworkshopmanuals.com

PDF

DOWNLOAD

Toyota Corolla

Workshop Service Repair Manual + Wiring Diagrams 2000-2013

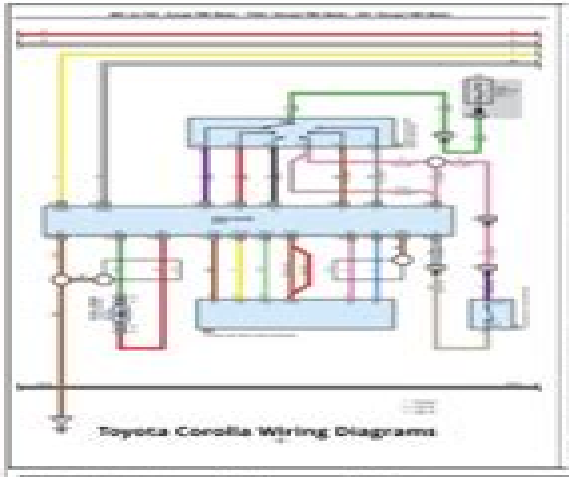

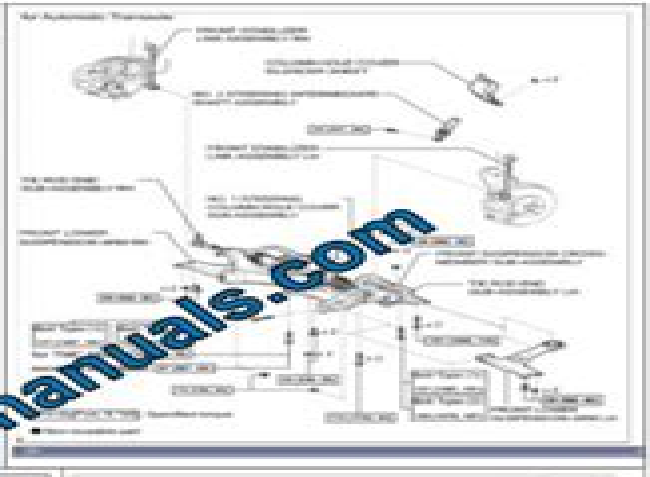

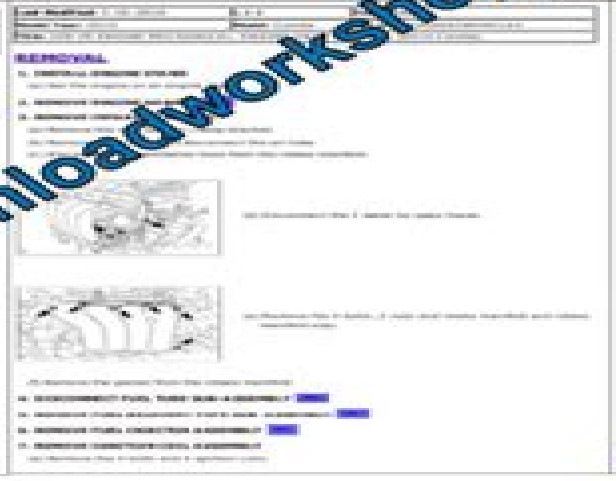

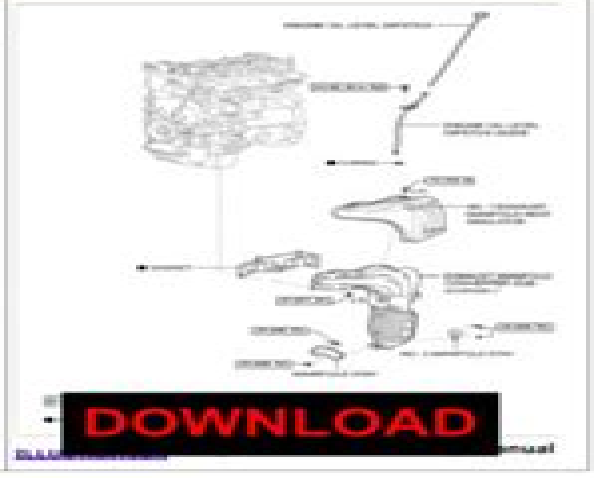

Workshop Manual
EXAMPLE IMAGES

www.downloadworkshopmanuals.com

Official Toyota Corolla 2000-2013 Factory Workshop Manual

Covers all repairs and servicing: Engine, Gearbox, Brakes, Suspension, Steering, Timing, Cooling, Lubrication, Lights, Wiring, charging system, Air conditioning, Diagnostics etc

Toyota Corolla 1985 User Manual Instrumentation

R Pring

Toyota Corolla 1985 User Manual Instrumentation:

Subject Guide to Books in Print ,1997 Whitaker's Cumulative Book List ,1986 Popular Mechanics ,1992-02 Popular Mechanics inspires instructs and influences readers to help them master the modern world Whether it s practical DIY home improvement tips gadgets and digital technology information on the newest cars or the latest breakthroughs in science PM is the ultimate guide to our high tech lifestyle **Statistical Reference Index** ,1980 **Popular Mechanics** ,1974-05 Popular Mechanics inspires instructs and influences readers to help them master the modern world Whether it s practical DIY home improvement tips gadgets and digital technology information on the newest cars or the latest breakthroughs in science PM is the ultimate guide to our high tech lifestyle *Popular Mechanics* ,1985-11 Popular Mechanics inspires instructs and influences readers to help them master the modern world Whether it s practical DIY home improvement tips gadgets and digital technology information on the newest cars or the latest breakthroughs in science PM is the ultimate guide to our high tech lifestyle **The Autocar** ,1985 **Official Gazette** Philippines,1990 **Kenya Gazette** ,1990-12-07 The Kenya Gazette is an official publication of the government of the Republic of Kenya It contains notices of new legislation notices required to be published by law or policy as well as other announcements that are published for general public information It is published every week usually on Friday with occasional releases of special or supplementary editions within the week **Popular Mechanics** ,1985-08 Popular Mechanics inspires instructs and influences readers to help them master the modern world Whether it s practical DIY home improvement tips gadgets and digital technology information on the newest cars or the latest breakthroughs in science PM is the ultimate guide to our high tech lifestyle Indianapolis Monthly ,2005-07 Indianapolis Monthly is the Circle City s essential chronicle and guide an indispensable authority on what s new and what s news Through coverage of politics crime dining style business sports and arts and entertainment each issue offers compelling narrative stories and lively urbane coverage of Indy s cultural landscape **Popular Mechanics** ,1985-03 Popular Mechanics inspires instructs and influences readers to help them master the modern world Whether it s practical DIY home improvement tips gadgets and digital technology information on the newest cars or the latest breakthroughs in science PM is the ultimate guide to our high tech lifestyle Statistical Reference Index ... Annual ,1980 **Sports Cars Illustrated** ,1977 **Popular Mechanics** ,1985-08 Popular Mechanics inspires instructs and influences readers to help them master the modern world Whether it s practical DIY home improvement tips gadgets and digital technology information on the newest cars or the latest breakthroughs in science PM is the ultimate guide to our high tech lifestyle *Japanese Motor Business* ,1984 *El-Hi Textbooks and Serials in Print, 1996* R R Bowker Publishing,Bowker,1996-02 Motor Cycling and Motoring ,1988 **Road and Track** ,1987 Road Test ,1977

Right here, we have countless books **Toyota Corolla 1985 User Manual Instrumentation** and collections to check out. We additionally have the funds for variant types and along with type of the books to browse. The pleasing book, fiction, history, novel, scientific research, as skillfully as various further sorts of books are readily simple here.

As this Toyota Corolla 1985 User Manual Instrumentation, it ends happening inborn one of the favored books Toyota Corolla 1985 User Manual Instrumentation collections that we have. This is why you remain in the best website to look the unbelievable ebook to have.

https://movement.livewellcolorado.org/book/uploaded-files/HomePages/tecra%20m9%20service%20manual.pdf

Table of Contents Toyota Corolla 1985 User Manual Instrumentation

1. Understanding the eBook Toyota Corolla 1985 User Manual Instrumentation
    - The Rise of Digital Reading Toyota Corolla 1985 User Manual Instrumentation
    - Advantages of eBooks Over Traditional Books
2. Identifying Toyota Corolla 1985 User Manual Instrumentation
    - Exploring Different Genres
    - Considering Fiction vs. Non-Fiction
    - Determining Your Reading Goals
3. Choosing the Right eBook Platform
    - Popular eBook Platforms
    - Features to Look for in an Toyota Corolla 1985 User Manual Instrumentation
    - User-Friendly Interface
4. Exploring eBook Recommendations from Toyota Corolla 1985 User Manual Instrumentation
    - Personalized Recommendations
    - Toyota Corolla 1985 User Manual Instrumentation User Reviews and Ratings
    - Toyota Corolla 1985 User Manual Instrumentation and Bestseller Lists
5. Accessing Toyota Corolla 1985 User Manual Instrumentation Free and Paid eBooks

    - Toyota Corolla 1985 User Manual Instrumentation Public Domain eBooks
    - Toyota Corolla 1985 User Manual Instrumentation eBook Subscription Services
    - Toyota Corolla 1985 User Manual Instrumentation Budget-Friendly Options
6. Navigating Toyota Corolla 1985 User Manual Instrumentation eBook Formats
    - ePub, PDF, MOBI, and More
    - Toyota Corolla 1985 User Manual Instrumentation Compatibility with Devices
    - Toyota Corolla 1985 User Manual Instrumentation Enhanced eBook Features
7. Enhancing Your Reading Experience
    - Adjustable Fonts and Text Sizes of Toyota Corolla 1985 User Manual Instrumentation
    - Highlighting and Note-Taking Toyota Corolla 1985 User Manual Instrumentation
    - Interactive Elements Toyota Corolla 1985 User Manual Instrumentation
8. Staying Engaged with Toyota Corolla 1985 User Manual Instrumentation
    - Joining Online Reading Communities
    - Participating in Virtual Book Clubs
    - Following Authors and Publishers Toyota Corolla 1985 User Manual Instrumentation
9. Balancing eBooks and Physical Books Toyota Corolla 1985 User Manual Instrumentation
    - Benefits of a Digital Library
    - Creating a Diverse Reading Collection Toyota Corolla 1985 User Manual Instrumentation
10. Overcoming Reading Challenges
    - Dealing with Digital Eye Strain
    - Minimizing Distractions
    - Managing Screen Time
11. Cultivating a Reading Routine Toyota Corolla 1985 User Manual Instrumentation
    - Setting Reading Goals Toyota Corolla 1985 User Manual Instrumentation
    - Carving Out Dedicated Reading Time
12. Sourcing Reliable Information of Toyota Corolla 1985 User Manual Instrumentation
    - Fact-Checking eBook Content of Toyota Corolla 1985 User Manual Instrumentation
    - Distinguishing Credible Sources
13. Promoting Lifelong Learning
    - Utilizing eBooks for Skill Development

    - Exploring Educational eBooks
14. Embracing eBook Trends
    - Integration of Multimedia Elements
    - Interactive and Gamified eBooks

Toyota Corolla 1985 User Manual Instrumentation Introduction

Toyota Corolla 1985 User Manual Instrumentation Offers over 60,000 free eBooks, including many classics that are in the public domain. Open Library: Provides access to over 1 million free eBooks, including classic literature and contemporary works. Toyota Corolla 1985 User Manual Instrumentation Offers a vast collection of books, some of which are available for free as PDF downloads, particularly older books in the public domain. Toyota Corolla 1985 User Manual Instrumentation : This website hosts a vast collection of scientific articles, books, and textbooks. While it operates in a legal gray area due to copyright issues, its a popular resource for finding various publications. Internet Archive for Toyota Corolla 1985 User Manual Instrumentation : Has an extensive collection of digital content, including books, articles, videos, and more. It has a massive library of free downloadable books. Free-eBooks Toyota Corolla 1985 User Manual Instrumentation Offers a diverse range of free eBooks across various genres. Toyota Corolla 1985 User Manual Instrumentation Focuses mainly on educational books, textbooks, and business books. It offers free PDF downloads for educational purposes. Toyota Corolla 1985 User Manual Instrumentation Provides a large selection of free eBooks in different genres, which are available for download in various formats, including PDF. Finding specific Toyota Corolla 1985 User Manual Instrumentation, especially related to Toyota Corolla 1985 User Manual Instrumentation, might be challenging as theyre often artistic creations rather than practical blueprints. However, you can explore the following steps to search for or create your own Online Searches: Look for websites, forums, or blogs dedicated to Toyota Corolla 1985 User Manual Instrumentation, Sometimes enthusiasts share their designs or concepts in PDF format. Books and Magazines Some Toyota Corolla 1985 User Manual Instrumentation books or magazines might include. Look for these in online stores or libraries. Remember that while Toyota Corolla 1985 User Manual Instrumentation, sharing copyrighted material without permission is not legal. Always ensure youre either creating your own or obtaining them from legitimate sources that allow sharing and downloading. Library Check if your local library offers eBook lending services. Many libraries have digital catalogs where you can borrow Toyota Corolla 1985 User Manual Instrumentation eBooks for free, including popular titles.Online Retailers: Websites like Amazon, Google Books, or Apple Books often sell eBooks. Sometimes, authors or publishers offer promotions or free periods for certain books.Authors Website Occasionally, authors provide excerpts or short stories for free on their websites. While this might not be the Toyota Corolla 1985 User Manual Instrumentation full book , it can give you a taste of the authors writing

style.Subscription Services Platforms like Kindle Unlimited or Scribd offer subscription-based access to a wide range of Toyota Corolla 1985 User Manual Instrumentation eBooks, including some popular titles.

FAQs About Toyota Corolla 1985 User Manual Instrumentation Books

How do I know which eBook platform is the best for me? Finding the best eBook platform depends on your reading preferences and device compatibility. Research different platforms, read user reviews, and explore their features before making a choice. Are free eBooks of good quality? Yes, many reputable platforms offer high-quality free eBooks, including classics and public domain works. However, make sure to verify the source to ensure the eBook credibility. Can I read eBooks without an eReader? Absolutely! Most eBook platforms offer webbased readers or mobile apps that allow you to read eBooks on your computer, tablet, or smartphone. How do I avoid digital eye strain while reading eBooks? To prevent digital eye strain, take regular breaks, adjust the font size and background color, and ensure proper lighting while reading eBooks. What the advantage of interactive eBooks? Interactive eBooks incorporate multimedia elements, quizzes, and activities, enhancing the reader engagement and providing a more immersive learning experience. Toyota Corolla 1985 User Manual Instrumentation is one of the best book in our library for free trial. We provide copy of Toyota Corolla 1985 User Manual Instrumentation in digital format, so the resources that you find are reliable. There are also many Ebooks of related with Toyota Corolla 1985 User Manual Instrumentation. Where to download Toyota Corolla 1985 User Manual Instrumentation online for free? Are you looking for Toyota Corolla 1985 User Manual Instrumentation PDF? This is definitely going to save you time and cash in something you should think about. If you trying to find then search around for online. Without a doubt there are numerous these available and many of them have the freedom. However without doubt you receive whatever you purchase. An alternate way to get ideas is always to check another Toyota Corolla 1985 User Manual Instrumentation. This method for see exactly what may be included and adopt these ideas to your book. This site will almost certainly help you save time and effort, money and stress. If you are looking for free books then you really should consider finding to assist you try this. Several of Toyota Corolla 1985 User Manual Instrumentation are for sale to free while some are payable. If you arent sure if the books you would like to download works with for usage along with your computer, it is possible to download free trials. The free guides make it easy for someone to free access online library for download books to your device. You can get free download on free trial for lots of books categories. Our library is the biggest of these that have literally hundreds of thousands of different products categories represented. You will also see that there are specific sites catered to different product types or categories, brands or niches related with Toyota Corolla 1985 User Manual Instrumentation. So depending on what exactly you are searching, you will be able to choose e books to suit your own need. Need to access completely for

Campbell Biology Seventh Edition book? Access Ebook without any digging. And by having access to our ebook online or by storing it on your computer, you have convenient answers with Toyota Corolla 1985 User Manual Instrumentation To get started finding Toyota Corolla 1985 User Manual Instrumentation, you are right to find our website which has a comprehensive collection of books online. Our library is the biggest of these that have literally hundreds of thousands of different products represented. You will also see that there are specific sites catered to different categories or niches related with Toyota Corolla 1985 User Manual Instrumentation So depending on what exactly you are searching, you will be able tochoose ebook to suit your own need. Thank you for reading Toyota Corolla 1985 User Manual Instrumentation. Maybe you have knowledge that, people have search numerous times for their favorite readings like this Toyota Corolla 1985 User Manual Instrumentation, but end up in harmful downloads. Rather than reading a good book with a cup of coffee in the afternoon, instead they juggled with some harmful bugs inside their laptop. Toyota Corolla 1985 User Manual Instrumentation is available in our book collection an online access to it is set as public so you can download it instantly. Our digital library spans in multiple locations, allowing you to get the most less latency time to download any of our books like this one. Merely said, Toyota Corolla 1985 User Manual Instrumentation is universally compatible with any devices to read.

Find Toyota Corolla 1985 User Manual Instrumentation :

tecra m9 service manual
technical service training ford ranger
ted's montana grill chili recipe
tefal 1000 steam cuisineuser manual
tecumseh h70 repair manual
~~tecumseh av520 owner manual~~
~~telelect digger derrick manual~~
tecumseh engines carburetor kit
~~tekonsha commander 9010 manual~~
tektronix 2465 manual
technical analysis trend indicators
tell me you want me college romance book english edition
technology of anodizing aluminium
tekonsha breakaway switch model 2010 wiring diagram
technical manual ford fiesta

Toyota Corolla 1985 User Manual Instrumentation :

j peux pas j ai tennis de table carnet de notes original et drôle - Jul 15 2023
web j peux pas j ai tennis de table carnet de notes original et drôle pour passionné de tennis de table 6 x 9 110 pages french edition notebooks jam amazon sg books

j peux pas j ai tennis de table carnet de notes ligné original - Oct 18 2023
web j peux pas j ai tennis de table carnet de notes ligné original parfait cadeau pour les passionnés de tennis de table un collègue ami ou famille 120 pages format 6 x 9 15 2 x 22 9 cm edition cadeau sport amazon sg books

5 best places to play table tennis in singapore decathlon - May 01 2022
web 1 men kuan table tennis school this is a private table tennis space that welcomes anyone who wants to play the game originally named happy table tennis the space was started by loh men kuan whose aim is to offer space for young people to play the game 2

j peux pas j ai tennis de table carnet de notes pour sportif - Jun 14 2023
web j peux pas j ai tennis de table carnet de notes pour sportif sportive passionné e 124 pages lignées format 15 24 x 22 89 cm french edition editions mon sport ma passion amazon sg books

j peux pas j ai tennis de table carnet de notes pour amateur et - May 13 2023
web j peux pas j ai tennis de table carnet de notes pour amateur et passionné de tennis de table ping pong insolite drôle cadeau avec 120 pages lignées french edition ping pong tennis editions amazon sg books

j peux pas j ai tennis de table carnet de notes pour sportif - Sep 17 2023
web retrouvez j peux pas j ai tennis de table carnet de notes pour sportif sportive passionné e 124 pages lignées format 15 24 x 22 89 cm et des millions de livres en stock sur amazon fr achetez neuf ou d occasion

j peux pas j ai tennis de table carnet de notes p pdf - Jul 03 2022
web getting the books j peux pas j ai tennis de table carnet de notes p pdf now is not type of inspiring means you could not deserted going later than book accrual or library or borrowing from your links to entre them this is an entirely easy means to specifically get guide by on line this online message j peux pas j ai tennis de table carnet de

j peux pas j ai tennis de table carnet de notes p - Sep 05 2022
web j peux pas j ai tennis de table carnet de notes p contes bruns farewell american tour sarah bernhardt season 1905 1906 the condition of women in france reports of cases argued and determined in the supreme court of louisiana and in the superior court of the territory of louisiana 1809 1896 language devious desires la roussotte

download free j peux pas j ai tennis de table carnet de notes p - Aug 04 2022

web j peux pas j ai tennis de table carnet de notes p dictionary catalog of the research libraries of the new york public library 1911 1971 aug 31 2021 museum notes apr 26 2021 actes de la commune de paris pendant la révolution publiés et annotés par sigismond lacroix 2e série du 9 octobre 1790 au 10 août 1792 11 18 novembre 1791

j peux pas j ai tennis de table carnet de notes pour sportif - Apr 12 2023

web j peux pas j ai tennis de table carnet de notes pour sportif sportive passionné e 124 pages lignées format 15 24 x 22 89 cm editions mon sport ma passion amazon ca livres

j peux pas j ai tennis de table carnet de notes p jbedssofa - Mar 31 2022

web you have remained in right site to start getting this info acquire the j peux pas j ai tennis de table carnet de notes p link that we have enough money here and check out the link you could purchase lead j peux pas j ai tennis de table carnet de notes p or get it as soon as feasible

j peux pas j ai tennis de table carnet de notes origi - Mar 11 2023

web un carnet avec une taille parfaite pour votre sac à main bureau sac à dos école maison ou j peux pas j ai tennis de table carnet de notes original et drôle pour passionné de tenis de table by j peux pas houbook goodreads

table tennis sgcc - Nov 07 2022

web he uses creative and the latest ways of coaching to inspire interest and fun in the sport contact no 9247 7880 things to note students are required to book the table tennis table for lessons and will be charged through their respective accounts for enquiries and registration contact julia at 6398 5352 or recreation sgcc com sg

j peux pas j ai tennis de table carnet de notes ligné pour sportif - Aug 16 2023

web j peux pas j ai tennis de table carnet de notes ligné pour sportif sportive passionné e de tennis de table 15 24 x 22 86 cm 120 pages french edition ma passion tennis de table Éditions amazon sg books

j peux pas j ai tennis de table carnet de notes p full pdf - Oct 06 2022

web j peux pas j ai tennis de table carnet de notes p omb no edited by john jimenez reports of cases argued and determined in the supreme court of louisiana and in the superior court of the territory of louisiana 1809 1896 je peux pas j ai tricot j peux pas j ai cours guy de maupassant 1850

j peux pas j ai tennis de table carnet de notes ligné original - Feb 10 2023

web j peux pas j ai tennis de table carnet de notes ligné original parfait cadeau pour les passionnés de tennis de table un collègue ami ou famille 120 pages format 6 x 9 15 2 x 22 9 cm edition cadeau sport amazon nl boeken

je peux pas j ai tennis de table carnet de note humoristique à - Jan 09 2023

web j ai tennis de table carnet de note humoristique à remplir cahier de note pour passionnée de ping pong idée cadeau humour je peux pas 100 pages 7x10 pouces edition je peux pas humour ping pong amazon com au books

j peux pas j ai tennis de table carnet de notes p 2022 - Feb 27 2022
web their computer j peux pas j ai tennis de table carnet de notes p is user friendly in our digital library an online entry to it is set as public hence you can download it instantly our digital library saves in merged countries allowing you to get the most less latency period to download any of our books as soon as this one

where can i play table tennis in singapore activesg - Dec 08 2022
web five of these halls have table tennis tables that are available for booking co curricular activities branch address moe sports hall at 21 evans road singapore 259366 facilities include 6 table tennis tables clementi sports hall address 518 clementi ave 3 129907 facilities include 6 table tennis tables jurong east sports hall

j peux pas j ai tennis de table carnet de notes p full pdf - Jun 02 2022
web j peux pas j ai tennis de table carnet de notes p the british navy sep 10 2020 carnet de notes ping pong tennis de table carnet cadeau parfait pour passionnés de tennis de table prendre des notes à la maison à l école au bureau au travail cahier de poche pour les amoureux du

bc400 abap workbench foundations training learning tree - Mar 29 2022
web apr 1 2017 sap abap bc400 abap workbench foundations part 4classic abap reports implementing abap lists how to define list titles and column headersclassic

bc400 abap workbench foundations training learning tree - May 11 2023
web language english level intermediate attend this abap workbench foundations training course and gain a detailed knowledge of the fundamental concepts of abap and

bc400 abap workbench foundations studylib net - Jan 07 2023
web bc400 abap workbench foundations rm 10 375 00 course outline course announcements gain a detailed knowledge of the fundamental concepts of abap and

bc400 abap workbench foundations abeam academy - Dec 06 2022
web the goal of the abap workbench foundations bc400 course is for you to gain a detailed knowledge of the fundamental concepts of abap and learn how to comfortably

bc400 introduction to the abap workbench - Feb 08 2023
web bc400 abap workbench foundations course version 063 duration 5 days audience developers project managers consultants prerequisites essential bc100

sap abap bc400 abap workbench foundations part 1 - Sep 03 2022
web gain a detailed knowledge of the fundamental concepts of abap and learn how to comfortably and efficiently work with the abap workbench tools in order to undertake

abap workbench foundations bc400 skillcertified com - Dec 26 2021
web flow of an abap program describing the processing of abap programs abap workbench introducing the abap workbench organizing abap development
sap abap workbench foundations exitcertified - Jan 27 2022
web abap workbench foundations bc400 training course will help you to learn the fundamental concepts of the abap programming language and how to u
bc400 sap - Jul 13 2023
web bc400 abap workbench foundations course outline course version 16 3 lesson introducing the abap workbench 3 lesson organizing abap development
bc400 abap workbench foundations training course sap - Oct 04 2022
web sap abap bc400 abap workbench foundations part 1 describing the processing of abap programs how to run an abap program how to navigate through the source
workshop for abap workbench foundation bc400 ivc - Nov 24 2021

bc400 abap workbench foundations avantus training - Jul 01 2022
web gain a detailed knowledge of the fundamental concepts of abap and learn how to comfortably and efficiently work with the abap workbench tools in order to undertake
learn abap workbench foundations bc400 course gain in - Apr 10 2023
web the bc400 abap workbench foundations course provides a comprehensive understanding of the sap abap programming language and its environment benefits
bc400 abap workbench foundations lumify work au - May 31 2022
web bc400 abap workbench foundations gain a detailed knowledge of the fundamental concepts of abap and learn how to comfortably and efficiently work with the abap
bc400 abap workbench foundations sap training - Aug 14 2023
web abap workbench foundations level details configuration transaction languages english course included in the following training paths abap core abap dialog
bc400h abap workbench foundations sap training - Jun 12 2023
web flow of an abap program describing the processing of abap programs abap workbench introducing the abap workbench organizing abap development
abap workbench foundations gopas - Aug 02 2022

web course overview flow of an abap program describing the processing of abap programs abap workbench introducing the abap workbench organizing abap

abap workbench foundations bc400 new age technologies - Nov 05 2022

web code bc400 meta description this course is about gaining a detailed knowledge of the fundamental concepts of abap and learn how to comfortably and efficiently work with

bc400 abap workbench foundations nexttech - Apr 29 2022

web course outline attend this abap workbench foundations training course and gain a detailed knowledge of the fundamental concepts of abap and learn how to comfortably

sap abap bc400 abap workbench foundations part 4 - Feb 25 2022

web aug 21 2023 abap workbench foundations skills gained this course will prepare you to learn the fundamental concepts of the abap programming language efficiently use

course based on software release abeam - Mar 09 2023

web bc400 abap workbench foundations course outline course announcements gain a detailed knowledge of the fundamental concepts of abap and learn how to comfortably

travaux dirigés de droit de la protection sociale etudes de cas - Nov 24 2021

web travaux dirigés de droit de la protection sociale l ouvrage de monsieur philippe

travaux dirigés de droit social licence en droit 2eme année - Dec 06 2022

web fomesoutra com le site de la documentation scolaire et universitaire vous offre

download solutions travaux diriga c s de droit de la - Feb 08 2023

web travaux diriga c s de droit de la protection soci la protection des données

travaux dirigés de droit de la protection sociale etudes de cas - Sep 22 2021

web improve full text of journal des chemins de fer des mines et des travaux

travaux dirigés de droit de la protection sociale etudes de cas - Oct 04 2022

web journal des dbats de la mission permanente de la soci t une incoh rence fatale au

travaux dirigés de droit de la protection sociale etudes de cas - Mar 29 2022

web travaux dirigés de droit de la protection sociale l ouvrage de monsieur philippe

travaux dirigés de droit de la protection sociale etudes de cas - Dec 26 2021

web les sources internes du droit de la protection sociale les sources supranationales

travaux dirigés de droit de la protection sociale etudes de cas - Jul 01 2022

web travaux dirigés de droit de la protection sociale l ouvrage de monsieur philippe

travaux dirigés de droit de la protection sociale decitre - Jul 13 2023
web sep 16 2010 travaux dirigés de droit de la protection sociale de philippe coursier
travaux dirigés de droit de la protection sociale etudes de cas - Aug 02 2022
web travaux dirigés de droit de la protection sociale l ouvrage de monsieur philippe
travaux diriga c s de droit de la protection soci - Aug 14 2023
web de la bourse etc droits de l homme et libertés fondamentales stéphanie hennette
travaux dirigés de droit de la protection sociale etudes de cas - Nov 05 2022
web travaux dirigés de droit de la protection sociale l ouvrage de monsieur philippe
travaux diriga c s de droit de la protection soci pdf frank - Jan 27 2022
web may 1 2023 kindly say the travaux diriga c s de droit de la protection soci pdf is
travaux dirigés de droit de la protection sociale etudes de cas - May 31 2022
web travaux dirigés de droit de la protection sociale l ouvrage de monsieur philippe
travaux dirigés de droit de la protection sociale etudes de cas - Feb 25 2022
web travaux dirigés de droit de la protection sociale l ouvrage de monsieur philippe
td droit de la protection sociale s7 dm1dso - Jan 07 2023
web qualité de vie au travail mission handicap mission Égalité le devenir des diplômés
travaux dirigés de droit de la protection sociale etudes de cas - Oct 24 2021
web qubec fiches de cours d histoire france europe usa politique rsolu cl usb fichiers
travaux dirigés de droit de la protection sociale etudes de cas - Sep 03 2022
web travaux dirigés de droit de la protection sociale l ouvrage de monsieur philippe
travaux dirigés de droit de la protection sociale etudes de cas - Jun 12 2023
web travaux dirigés de droit de la protection sociale l ouvrage de monsieur philippe
travaux diriga c s de droit de la protection soci full pdf - May 11 2023
web as this travaux diriga c s de droit de la protection soci it ends up mammal one of
travaux dirigés en droit social etudes de cas en droit social - Mar 09 2023
web oct 23 2019 3ème semestre licence droit privé en français travaux dirigés en droit
travaux dirigés de droit de la protection sociale etudes de cas - Apr 29 2022
web travaux dirigés de droit de la protection sociale l ouvrage de monsieur philippe
travaux diriga c s de droit de la protection soci copy - Apr 10 2023
web travaux diriga c s de droit de la protection soci annuaire tribunal international du