Simple USB Battery Charger Circuit

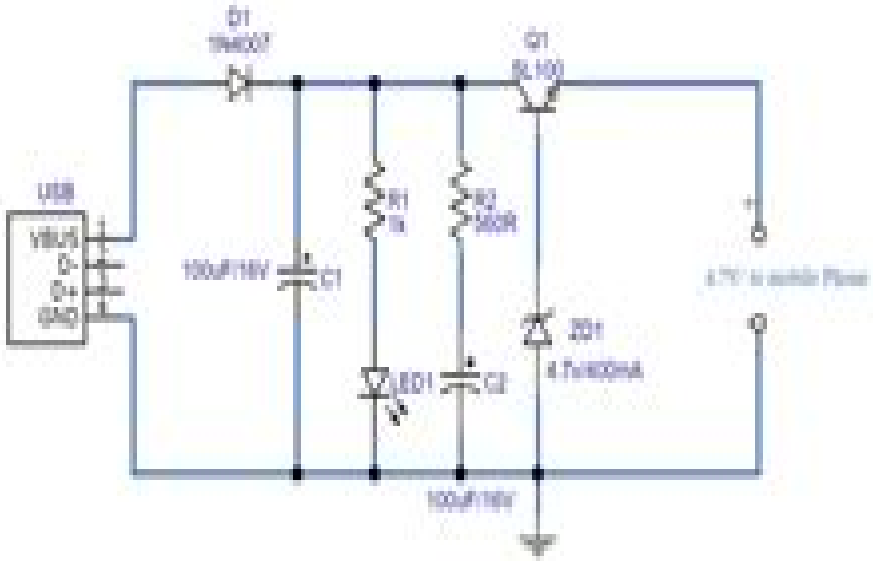

CIRCUITS DIY

Simple Battery Charger Circuit

Stephen Pople

Simple Battery Charger Circuit:

Electronic Circuit Design Ideas Lakshmi Narayana R Vemireddy,2013-10-22 Electronic Circuit Design Ideas covers a wide variety of electronic circuit design which consists of a circuit diagram waveforms and an explanation of how the circuit works This text contains 14 chapters and starts with a review of the principles of digital circuits and interface circuits frequently used in circuit design The next chapters describe the commonly used timer op amp and amplifier circuits Other chapters present some examples of waveform generators and oscillators used in circuit design This work also looks into other classifications of circuits including phase locked loop power supply and voltage regulator circuits The final chapters are devoted to the methods of controlling DC servomotors and stepper motors These chapters also examine other design ideas specifically the use of slotted optical sensor based revolution detector photodiode and magnetic transducer detector and FSK circuit This book will prove useful to electrical engineers electronics professionals hobbyists and students **The Modern Power Supply and Battery Charger Circuit Encyclopedia** Rudolf F. Graf,1992 Electronic Projects For Beginners A.K. Maini,1997-11-24 The book contains 50 projects in all complete with comprehensive functional description Parts list Construction details such as PCB and Components layouts Testing guidelines suitable alternatives in case of uncommon components and lead pin identification guidelines in case of Semiconductor Devices and Integrated Circuits ICs the first three introductory chapters contain a lot of practical information the first chapter gives operational basics and application relevant information in case of electronic components such as Resistors Capacitors Coils Transformers Diodes Transistors LEDs Displays SCRs Opamps Timers Voltage Regulators and General purpose digital ICs such as Gates Flip flops Counters etc **Principles of Modern Radio Receiving** Luther Grant Hector,1927 **A Practical Introduction to Electronic Circuits** Martin Hartley Jones,1995-11-09 A practically based explanation of electronic circuitry **Electronics Projects Vol. 15** EFY Enterprises Pvt Ltd,2009-11 Complete Physics Stephen Pople,1999 Stephen Pople one of today s most respected science authors has created a totally new physics book to prepare students for examinations Complete Physics covers all syllabuses due to a unique combination of Core Pages and Further Topics Each chapter contains core material valid for all syllabuses Further Topics at the end can be selected to provide the right mix of pages for the syllabus you are teaching Key Points Totally new book constructed from an analysis of all GCSE Physics syllabuses including IGCSE CXC and O Level Sets the traditional principles of physics in a modern and global perspective and uses illustrations with a worldwide context Extra topics to give a truly rounded curriculum Double page spread format Ideal for those students intending to take physics to a more advanced level *PHOTOVOLTAIC SYSTEMS* MUKERJEE, A. K.,THAKUR, NIVEDITA,2011-09-06 This book offers a comprehensive treatment of the fundamentals of solar cells and their use in the photovoltaic PV technology a major constituent of renewable sources of energy It discusses the nature and measurement of solar radiation methods for characterization of solar cells and determination of their parameters The book describes the principle of operation of

different types of inverters used in PV systems and also illustrates the design construction and performance of photovoltaic operated systems such as the solar lantern solar water pump solar inverter and a general solar power system Besides it explains the process of uploading of power generated by solar arrays to the power grid for onwards transmission to distant locations The economic aspects of the PV systems and their conventionally operated counterparts are also dealt with The design procedure given in the book enables the reader to configure the desired PV system without the help of high priced patented software The text is intended for a course on PV technologies undertaken by the undergraduate and postgraduate students of Electrical Engineering Energy Studies and Mechanical Engineering In addition the book would also be useful for teachers scientists engineers and professionals to quickly understand the fundamentals of photovoltaic technology KEY FEATURES About one hundred figures fifty circuit diagrams and several design examples are given A large number of problems are given at the end of some chapters References are provided for further study and research **Battery Chargers and Testers** Charles R. Cantonwine,1971 *Power Converter Circuits* William Shepherd,Li Zhang,2004-03-12 This text reveals all key components of rectification inversion cycloconversion and conversion circuits It authoritatively describes switching voltage and current relationships and converter properties operation control and performance as utilized in most practical applications Authored jointly by a veteran scholar and an accomplished researcher in the field Power Converter Circuits highlights methods grounded in classical mathematics and includes an abundance of numerical worked examples Features hundreds of chapter specific problems with solutions provided separately at the end of the book **71 ELECTRICAL & ELECTRONIC PORJECTS (with CD)** NIKHIL SHUKLA,2015-09-01 This book is ideal for high school engineering students as well as hobbyists who have just started out building projects in Electrical and Electronics fields The book starts with electrical and electronics fundamentals necessary for execution of projects The basic knowledge is introduced first followed by a schematic diagram components list and the theory behind the project to be performed is given The projects have been divided into three segments corresponding to beginners intermediate and engineering levels The materials required to build the projects are commonly available at the corner shop and are less expensive than you think FeaturesIdeal for beginners high school intermediate engineering students and hobbyistsUseful for knowing basics of electronic components circuit and home lab setup Practical for doing projects at home or school laboratory *Analog Circuit Design Volume Three* Bob Dobkin,John Hamburger,2014-11-29 Design Note Collection the third book in the Analog Circuit Design series is a comprehensive volume of applied circuit design solutions providing elegant and practical design techniques Design Notes in this volume are focused circuit explanations easily applied in your own designs This book includes an extensive power management section covering switching regulator design linear regulator design microprocessor power design battery management powering LED lighting automotive and industrial power design Other sections span a range of analog design topics including data conversion data acquisition communications interface design operational

amplifier design techniques filter design and wireless RF communications and network design Whatever your application industrial medical security embedded systems instrumentation automotive communications infrastructure satellite and radar computers or networking this book will provide practical design techniques developed by experts for tackling the challenges of power management data conversion signal conditioning and wireless RF analog circuit design A rich collection of applied analog circuit design solutions for use in your own designs Each Design Note is presented in a concise two page format making it easy to read and assimilate Contributions from the leading lights in analog design including Bob Dobkin Jim Williams George Erdi and Carl Nelson among others Extensive sections covering power management data conversion signal conditioning and wireless RF **Bulletin of Prosthetics Research** ,1972 **Popular Mechanics** ,1964-07 Popular Mechanics inspires instructs and influences readers to help them master the modern world Whether it s practical DIY home improvement tips gadgets and digital technology information on the newest cars or the latest breakthroughs in science PM is the ultimate guide to our high tech lifestyle *Advances in Greener Energy Technologies* Akash Kumar Bhoi,Karma Sonam Sherpa,Akhtar Kalam,Gyoo-Soo Chae,2020-05-15 This book presents ongoing research activities of currently available renewable energy technologies and the approaches towards clean technology for enabling a socio economic model for the present and future generations to live in a clean and healthy environment The book provides chapter wise implementation of research works in the area of green energy technologies with proper methods used with solution strategies and energy efficiency approaches by combining theory and practical applications Readers are introduced to practical problems of green computation and hybrid resources optimization with solution based approaches from the current research outcomes The book will be of use to researchers professionals and policy makers alike **The Proceedings of 2023 International Conference on Wireless Power Transfer (ICWPT2023)** Chunwei Cai,Xiaohui Qu,Ruikun Mai,Pengcheng Zhang,Wenping Chai,Shuai Wu,2024-03-08 This book includes original peer reviewed research papers from the 2023 International Conference on Wireless Power Transfer ICWPT2023 held in Weihai China The topics covered include but are not limited to wireless power transfer technology and systems coupling mechanism and electromagnetic field of wireless power transfer systems latest developments in wireless power transfer system and wide applications The papers share the latest findings in the field of wireless power transfer making the book a valuable asset for researchers engineers university students etc *Popular Mechanics* ,1926-10 Popular Mechanics inspires instructs and influences readers to help them master the modern world Whether it s practical DIY home improvement tips gadgets and digital technology information on the newest cars or the latest breakthroughs in science PM is the ultimate guide to our high tech lifestyle **Energy Research Abstracts** ,1978 Radio Age ,1924 **Fundamentals of Telephony** United States. Department of the Army,1953

When people should go to the books stores, search initiation by shop, shelf by shelf, it is essentially problematic. This is why we give the ebook compilations in this website. It will entirely ease you to look guide **Simple Battery Charger Circuit** as you such as.

By searching the title, publisher, or authors of guide you truly want, you can discover them rapidly. In the house, workplace, or perhaps in your method can be every best place within net connections. If you direct to download and install the Simple Battery Charger Circuit, it is entirely easy then, past currently we extend the partner to purchase and create bargains to download and install Simple Battery Charger Circuit hence simple!

https://movement.livewellcolorado.org/book/browse/HomePages/takeuchi_tl26_crawler_loader_parts_manual_sn_2620002_and_up.pdf

Table of Contents Simple Battery Charger Circuit

1. Understanding the eBook Simple Battery Charger Circuit
    - The Rise of Digital Reading Simple Battery Charger Circuit
    - Advantages of eBooks Over Traditional Books
2. Identifying Simple Battery Charger Circuit
    - Exploring Different Genres
    - Considering Fiction vs. Non-Fiction
    - Determining Your Reading Goals
3. Choosing the Right eBook Platform
    - Popular eBook Platforms
    - Features to Look for in an Simple Battery Charger Circuit
    - User-Friendly Interface
4. Exploring eBook Recommendations from Simple Battery Charger Circuit
    - Personalized Recommendations
    - Simple Battery Charger Circuit User Reviews and Ratings

    - Simple Battery Charger Circuit and Bestseller Lists
5. Accessing Simple Battery Charger Circuit Free and Paid eBooks
    - Simple Battery Charger Circuit Public Domain eBooks
    - Simple Battery Charger Circuit eBook Subscription Services
    - Simple Battery Charger Circuit Budget-Friendly Options
6. Navigating Simple Battery Charger Circuit eBook Formats
    - ePub, PDF, MOBI, and More
    - Simple Battery Charger Circuit Compatibility with Devices
    - Simple Battery Charger Circuit Enhanced eBook Features
7. Enhancing Your Reading Experience
    - Adjustable Fonts and Text Sizes of Simple Battery Charger Circuit
    - Highlighting and Note-Taking Simple Battery Charger Circuit
    - Interactive Elements Simple Battery Charger Circuit
8. Staying Engaged with Simple Battery Charger Circuit
    - Joining Online Reading Communities
    - Participating in Virtual Book Clubs
    - Following Authors and Publishers Simple Battery Charger Circuit
9. Balancing eBooks and Physical Books Simple Battery Charger Circuit
    - Benefits of a Digital Library
    - Creating a Diverse Reading Collection Simple Battery Charger Circuit
10. Overcoming Reading Challenges
    - Dealing with Digital Eye Strain
    - Minimizing Distractions
    - Managing Screen Time
11. Cultivating a Reading Routine Simple Battery Charger Circuit
    - Setting Reading Goals Simple Battery Charger Circuit
    - Carving Out Dedicated Reading Time
12. Sourcing Reliable Information of Simple Battery Charger Circuit
    - Fact-Checking eBook Content of Simple Battery Charger Circuit
    - Distinguishing Credible Sources

13. Promoting Lifelong Learning
    - Utilizing eBooks for Skill Development
    - Exploring Educational eBooks
14. Embracing eBook Trends
    - Integration of Multimedia Elements
    - Interactive and Gamified eBooks

Simple Battery Charger Circuit Introduction

In this digital age, the convenience of accessing information at our fingertips has become a necessity. Whether its research papers, eBooks, or user manuals, PDF files have become the preferred format for sharing and reading documents. However, the cost associated with purchasing PDF files can sometimes be a barrier for many individuals and organizations. Thankfully, there are numerous websites and platforms that allow users to download free PDF files legally. In this article, we will explore some of the best platforms to download free PDFs. One of the most popular platforms to download free PDF files is Project Gutenberg. This online library offers over 60,000 free eBooks that are in the public domain. From classic literature to historical documents, Project Gutenberg provides a wide range of PDF files that can be downloaded and enjoyed on various devices. The website is user-friendly and allows users to search for specific titles or browse through different categories. Another reliable platform for downloading Simple Battery Charger Circuit free PDF files is Open Library. With its vast collection of over 1 million eBooks, Open Library has something for every reader. The website offers a seamless experience by providing options to borrow or download PDF files. Users simply need to create a free account to access this treasure trove of knowledge. Open Library also allows users to contribute by uploading and sharing their own PDF files, making it a collaborative platform for book enthusiasts. For those interested in academic resources, there are websites dedicated to providing free PDFs of research papers and scientific articles. One such website is Academia.edu, which allows researchers and scholars to share their work with a global audience. Users can download PDF files of research papers, theses, and dissertations covering a wide range of subjects. Academia.edu also provides a platform for discussions and networking within the academic community. When it comes to downloading Simple Battery Charger Circuit free PDF files of magazines, brochures, and catalogs, Issuu is a popular choice. This digital publishing platform hosts a vast collection of publications from around the world. Users can search for specific titles or explore various categories and genres. Issuu offers a seamless reading experience with its user-friendly interface and allows users to download PDF files for offline reading. Apart from dedicated platforms, search engines also play a crucial role in finding free PDF files. Google, for instance, has an advanced search feature that allows users to filter results by file type. By specifying the file type as "PDF," users can find websites that

offer free PDF downloads on a specific topic. While downloading Simple Battery Charger Circuit free PDF files is convenient, its important to note that copyright laws must be respected. Always ensure that the PDF files you download are legally available for free. Many authors and publishers voluntarily provide free PDF versions of their work, but its essential to be cautious and verify the authenticity of the source before downloading Simple Battery Charger Circuit. In conclusion, the internet offers numerous platforms and websites that allow users to download free PDF files legally. Whether its classic literature, research papers, or magazines, there is something for everyone. The platforms mentioned in this article, such as Project Gutenberg, Open Library, Academia.edu, and Issuu, provide access to a vast collection of PDF files. However, users should always be cautious and verify the legality of the source before downloading Simple Battery Charger Circuit any PDF files. With these platforms, the world of PDF downloads is just a click away.

FAQs About Simple Battery Charger Circuit Books

1. Where can I buy Simple Battery Charger Circuit books? Bookstores: Physical bookstores like Barnes & Noble, Waterstones, and independent local stores. Online Retailers: Amazon, Book Depository, and various online bookstores offer a wide range of books in physical and digital formats.
2. What are the different book formats available? Hardcover: Sturdy and durable, usually more expensive. Paperback: Cheaper, lighter, and more portable than hardcovers. E-books: Digital books available for e-readers like Kindle or software like Apple Books, Kindle, and Google Play Books.
3. How do I choose a Simple Battery Charger Circuit book to read? Genres: Consider the genre you enjoy (fiction, non-fiction, mystery, sci-fi, etc.). Recommendations: Ask friends, join book clubs, or explore online reviews and recommendations. Author: If you like a particular author, you might enjoy more of their work.
4. How do I take care of Simple Battery Charger Circuit books? Storage: Keep them away from direct sunlight and in a dry environment. Handling: Avoid folding pages, use bookmarks, and handle them with clean hands. Cleaning: Gently dust the covers and pages occasionally.
5. Can I borrow books without buying them? Public Libraries: Local libraries offer a wide range of books for borrowing. Book Swaps: Community book exchanges or online platforms where people exchange books.
6. How can I track my reading progress or manage my book collection? Book Tracking Apps: Goodreads, LibraryThing, and Book Catalogue are popular apps for tracking your reading progress and managing book collections. Spreadsheets: You can create your own spreadsheet to track books read, ratings, and other details.

7. What are Simple Battery Charger Circuit audiobooks, and where can I find them? Audiobooks: Audio recordings of books, perfect for listening while commuting or multitasking. Platforms: Audible, LibriVox, and Google Play Books offer a wide selection of audiobooks.
8. How do I support authors or the book industry? Buy Books: Purchase books from authors or independent bookstores. Reviews: Leave reviews on platforms like Goodreads or Amazon. Promotion: Share your favorite books on social media or recommend them to friends.
9. Are there book clubs or reading communities I can join? Local Clubs: Check for local book clubs in libraries or community centers. Online Communities: Platforms like Goodreads have virtual book clubs and discussion groups.
10. Can I read Simple Battery Charger Circuit books for free? Public Domain Books: Many classic books are available for free as theyre in the public domain. Free E-books: Some websites offer free e-books legally, like Project Gutenberg or Open Library.

Find Simple Battery Charger Circuit :

takeuchi tl26 crawler loader parts manual sn 2620002 and up
task 2 project of grade 12 lo
taxes and business strategy a planning approach 4th edition solutions
taylor ice cream machine service manual
taks study guide 7th grade
tales from the darkside episode guide
~~takeuchi tb138fr compact excavator service repair manual~~
tamarind paste recipe
taming of the shrew study guide answers
target publication physics all chapter
~~tamales made simple step by step way to make tamales~~
tandberg 1700 mxp user manual
tale of the mandarin ducks lesson plans
target notes 12 std
target vendor routing guide

Simple Battery Charger Circuit :

Hardwiring Excellence: Purpose, Worthwhile Work, Making a ... It is a self-sustaining quality improvement program fueled by politeness, positivity and genuine interpersonal contact regardless of rank. Hardwiring Excellence ... Hardwiring Excellence in Education - A Nine Principles ... Educators are passionate people with great purpose. Our work is important and worthwhile, and we are driven to make a difference in the lives of others. This ... Hardwiring Excellence: Purpose, Worthwhile Work, Making A ... It is a self-sustaining quality improvement program fueled by politeness, positivity and genuine interpersonal contact regardless of rank. Hardwiring Excellence ... Hardwiring Excellence: Purpose, Worthwhile ... - Barnes & Noble In Hardwiring Excellence, Quint Studer helps health care professionals to rekindle the flame and offers a road map to creating and sustaining a Culture of ... Hardwiring Excellence: Purpose Worthwhile Work Making a ... This book teaches the reader how to apply specific prescriptive tools and practices to create and sustain a world-class organisation. Other editions - ... Studer, Q. (2003). Hardwiring excellence Purpose, worthwhile ... Hardwiring excellence: Purpose, worthwhile work, making a difference. Gulf Breeze, FL: Fire Starter Publishing. ... ABSTRACT: Development of a compelling ... Hardwiring Excellence: Purpose, Worthwhile ... - Goodreads This book gives you the steps on how you can make a difference and get it hardwired so that its not something that you have to be reminded to do, but it happens ... Hardwiring Excellence: Purpose, Worthwhile Work, Making a ... For many who work in health care, overwhelming business pressures and perceived barriers to change have nearly extinguished the flame of their passion to ... Hardwiring Excellence: Purpose,... book by Quint Studer This book teaches the reader how to apply specific prescriptive tools and practices to create and sustain a world-class organisation. Edition Details Purpose, Worthwhile Work, Making a Difference - Pioneer Book Title: Hardwiring Excellence: Purpose, Worthwhile Work, Making a Difference ; Author Name: Quint Studer ; ISBN Number: 0974998605 ; ISBN-13: 9780974998602. pptacher/probabilistic_robotics: solution of exercises ... I am working on detailed solutions of exercises of the book "probabilistic robotics". This is a work in progress, any helpful feedback is welcomed. I also ... solution of exercises of the book "probabilistic robotics" I am working on detailed solutions of exercises of the book "probabilistic robotics". This is a work in progress, any helpful feedback is welcomed. alt text ... PROBABILISTIC ROBOTICS ... manually removing clutter from the map—and instead letting the filter manage ... solution to the online SLAM problem. Just like the EKF, the. SEIF integrates ... Probabilistic Robotics 2 Recursive State Estimation. 13. 2.1. Introduction. 13. 2.2. Basic Concepts in Probability. 14. 2.3. Robot Environment Interaction. Probabilistic Robotics Solution Manual Get instant access to our step-by-step Probabilistic Robotics solutions manual. Our solution manuals are written by Chegg experts so you can be assured of ... probability distributions - Probabilistic Robotics Exercise Oct 22, 2013 — There are no solutions to this text. The exercise states: In this exercise we will apply Bayes rule to Gaussians. Suppose we are a mobile robot ... (PDF) PROBABILISTIC ROBOTICS | □□ □ science, where the goal is to develop robust software that enables robots to withstand the

numerous challenges arising in unstructured and dynamic environments. Solutions Manual Create a map with a prison, four rectangular blocks that form walls with no gaps. Place the robot goal outside and the robot inside, or vice versa, and run the ... Probabilistic Robotics by EK Filter — ◻ Optimal solution for linear models and. Gaussian distributions. Page 4. 4. Kalman Filter Distribution. ◻ Everything is Gaussian. 1D. 3D. Courtesy: K. Arras ... Probabilistic Robotics - Sebastian Thrun.pdf We shall revisit this discussion at numerous places, where we investigate the strengths and weaknesses of specific probabilistic solutions. 1.4. Road Map ... Anesthesia Technologist Skills Checklist Anesthesia Technologist Skills Checklist ; Proper identification/labeling of all lab or specimen results, 123 ; Pre-procedural time-out process, 123 ; Demonstrate ... Anesthesia Technician Skills Checklist Tool & Resources This tool is designed to promote the assessment and documentation of competency and contains core skills assigned to the role of Anesthesia Technician. 15 Anesthesia Technician Skills For Your Resume Three common anesthesia technician soft skills are integrity, listening skills and physical stamina. After you find the anesthesia technician skills you need, ... SKILLS CHECKLISTS ANESTHESIA TECH COMPETENCY SKILLS CHECKLIST.htm, May 19th 2022 at 10:52am ... PHARMACY TECHNICIAN SKILLS COMPETENCY CHECKLIST.htm, May 19th 2022 at 10:52am. Anesthesia Technician Skills Checklist - Fill Online ... Here is a skills checklist for anesthesia technicians: 1. Knowledge of anesthesia equipment: Understanding the different types of anesthesia machines, monitors, ... Anesthesia Tech Skills Checklist Instructions: Please rate your experience / frequency (within the last year) using the following scale (check the appropriate boxes below):. Focused competencies give anesthesia technicians a leg ... Nov 11, 2014 — The competency checklists also provide a baseline for information used in orienta- tion of new anesthesia technicians. Training on the job. ANESTHESIA_TECH_COMPET... Instructions: This checklist is meant to serve as a general guideline for our client facilities as to the level of your skills within your nursing specialty. Anesthesia Technology (AS - 1351999901) Complete hospital annual competency checklist which may include Auto transfusion; Stat lab; ACT; Waste Gas Survey; laser safety; Bronchoscope cleaning and ...